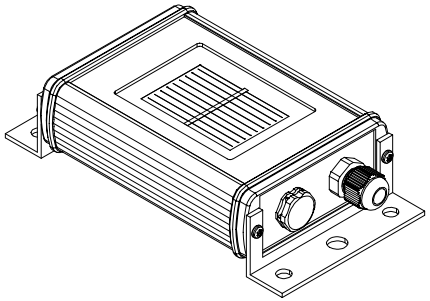

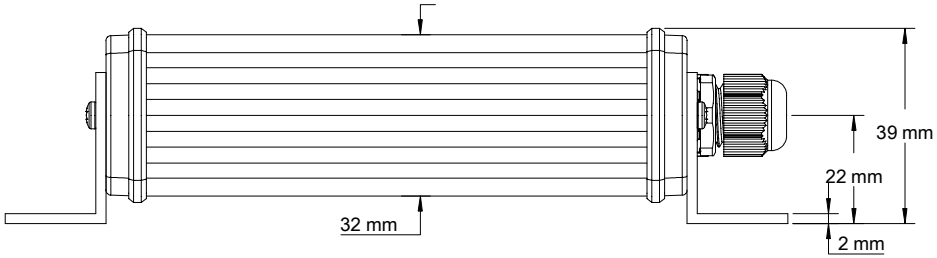

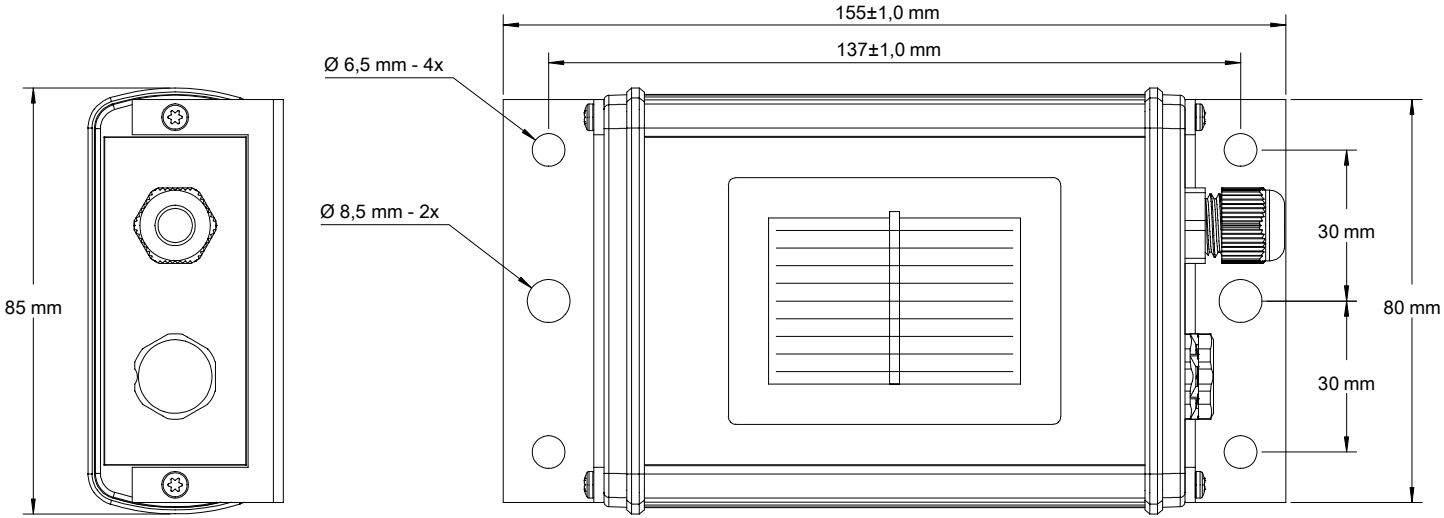

Scale: none	**Project:** Silicon Irradiance Sensor	
Layout by: Ingenieurbüro Mencke & Tegtmeyer GmbH Schwarzer Weg 43A 31789 Hameln, Germany Tel. +49 (0) 51 51 / 40 36 99 - 0 Fax. +49 (0) 51 51 / 40 36 99 - 19	**Drawing name:** Si - Series	
05.04.2016	Drawing No.	Page: **1** of 1 pages