Quick Reference Guide
digital Silicon Irradiance Sensor

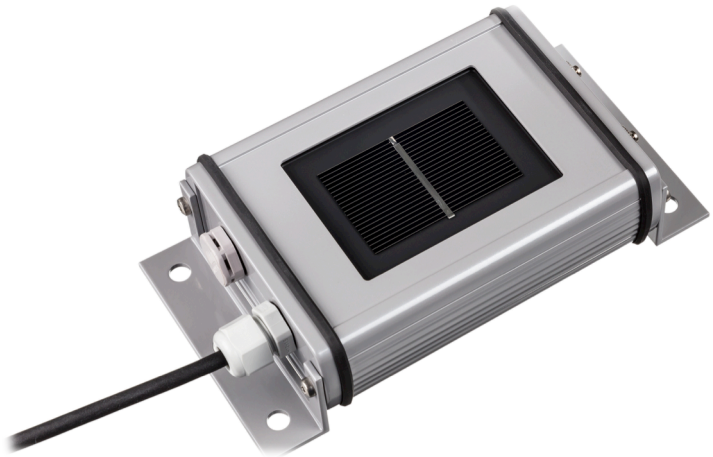

Main Data

Irradiance Measurement:	Up to 1500 W/m²
Cell Temperature Measurement:	-40 to +90°C
Working Temperature:	-35 to 80°C
Weight:	Approx. 0.4 kg

Type Overview

Type	Voltage Supply	Measuring Range Irradiance	Protocol
All sensors	10 to 28 VDC	0 to 1500 W/m²	MB: Modbus (RTU) MT: M&T protocol

Type	Measuring Temperature Solar Cell	Note
Si-RS485TC-T-MT Si-RS485TC-T-MB	-40 to +90°C	./.
Si-RS485TC-2T-MT Si-RS485TC-2T-MB	-40 to +90°C	Hard-wired external ambient temperature sensor (-40 to 90°C)
Si-RS485TC-3T-MT Si-RS485TC-3T-MB	-40 to +90°C	Two female connectors for two optional external temperature sensor (-40 to 90°C)
Si-RS485TC-T-Tm-MT Si-RS485TC-T-Tm -MB	-40 to +90°C	Hard-wired external module temperature sensor (-40 to 90°C)
Si-RS485TC-2T-v-MT Si-RS485TC-2T-v-MB	-40 to +90°C	Female connectors for optional external temperature sensor (-40 to 90°C) and wind speed sensor (0 to 80 m/s)

Measurement Uncertainty over all, according to GUM (Guide to the Expression of Uncertainty in Measurement), k = 2		
Irradiance	**±0.4 W/m² ± 1.6 % from rdg.**	Range 0 to 1500 W/sqm, perpendicular incidence of the light, spectrum AM 1.5
Irradiance	**IEC 61724-1, Class A**	Classification
All Temperatures	**1,0 K**	Range -35 to 80°C

User information

The sensor is designed for the measurement of solar irradiance (not concentrated) at PV monitoring. The warranty is for 1 year from the date of invoice for the intended use. M&T does not accept any liability for possible losses or damage due to incorrect usage of the sensor. Liability for consequential damages is excluded.
Special note: The housing for the Si sensors is not allowed to be opened by the installer or user, because as a consequence, the housing will no longer be sealed after it is closed. If the housing is opened, the manufacturer's warranty will be rendered void.

Maintenance

Scope of the regularly check (at least every 2 years): Cleaning of solar cell, external damage, mechanical fastening, cable laying and any damage to the cable.
In the report IEA-PVPS T13-03: 2014 "Analytical Monitoring of Grid-connected Photovoltaic Systems" an interval of 1 to 2 weeks is recommended.
Should damage be found that degrades the function or safety, the sensor is to be replaced.
A recalibration is recommended at least every 3 years.

	Si sensors that are used for monitoring PV installations must be installed with the **same alignment and inclination as the PV generator**. The mounting location should be free of shading as far as possible. To facilitate **maintenance and cleaning** of the Si sensor, the Si sensor should be mounted in an easily accessible place.
	The **mounting location** at a PV generator must be selected such that snow cannot jeopardise the Si sensor as it slides off. For this reason do not mount along the drip edge on the PV generator.
	The **connecting cable** should always be laid separated from, e.g. main DC cables or AC cables. The connecting cable is to be laid so it is fixed. The minimum bending radius of 15 x cable diameter (ø approx. 5 mm) is to be observed. The voltage drop at the cable has to be considered when calculating the maximum cable length.
	The pressure equalisation element must not be damaged. **The cable gland is not allowed to be undone or tightened by the user.** The housing for the Si sensors is not allowed to be opened, because as a consequence, the housing will no longer be sealed after it is closed. **If the housing is nevertheless opened, no liability for the sealing can be accepted.**
	The **surge protection concept** must be adapted to the specific local situation. This means, for instance, that the measuring cables must be equipped with a separate surge arrester at the entry to a building. The sensor must be integrated into the **lightning protection concept**.
	The sensors are designed for **safety extra-low voltage (SELV)** operation. The maximum power of the voltage supply is 50 VA(„Class 2 limited power“). Reversing the polarity or mixing up the connections on the Si sensor may cause irreversible damage to the sensor. The cable shield is to be connected to PE during installation.
	The installation and assembly of electrical equipment must be carried out by electrically qualified persons. The sensor may not be used with equipment whose direct or indirect purpose is to prevent human death or injury, or whose operation poses a risk to humans, animals or property.
	Mortal danger due to electrical power On the connection of the Si sensor to an inverter, dangerous voltages are present on the inverter (disconnection, secure against switching, follow inverter manual).
	Should it be necessary to **clean the Si sensor**, a soft cotton cloth, water and a mild cleaning agent can be used for this purpose.
	A terminating resistor is usually not required for the RS485 sensors.

Wire Color

Wire Color	All RS485 Sensors
Orange	RS485 Data- / B
Brown	RS485 Data+ / A
Black	Supply (negative)
Red	Supply (positive)
Black (thick)	Shield

Items supplied:

- Si sensor incl. pre-assembled connecting cable or suitable male connector
- Calibration Certificate
- Quick Reference Guide

Maximum additional Cable Length of Si Sensors with 3 m connection Cable at Voltage Supply of 24 VDC / 12 VDC

Sensor Type	Cable Cross Section						
	0.14 mm²	0.25 mm²	0.34 mm²	0.5 mm²	0.75 mm²	1.0 mm²	1.5 mm²
Si-RS485TC-XXX	300 m / 50 m	600 m / 100 m	800 m / 150 m	1000 m / 200 m	1000 m / 300 m	1000 m / 400 m	1000 m / 650 m

Note: If more sensors are supplied by the same voltage supply, the possible cable length is reduced accordingly.
Example: 3 sensors at 24 VDC and cable 0,14 mm²: 300 m / 3 = 100 m.

Wiring Diagram of digital Si Sensors

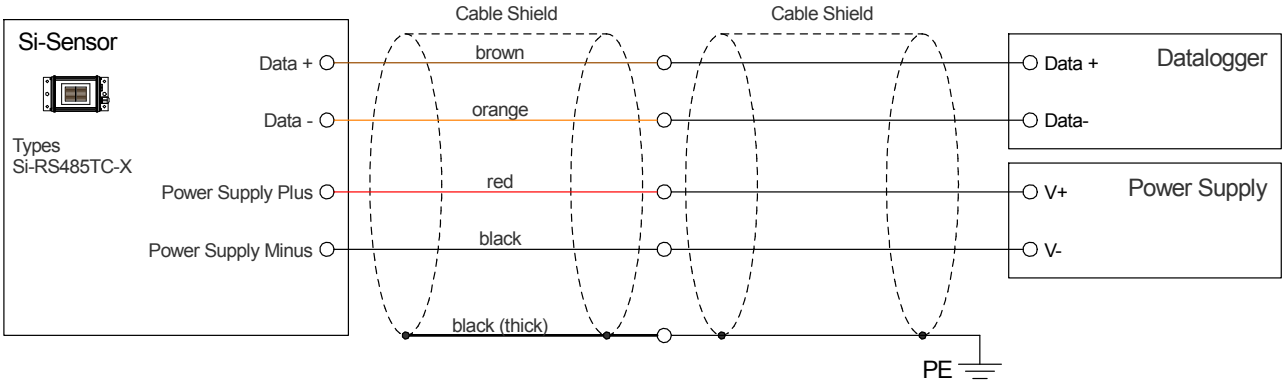

Bus Topology

Modbus Note: All bus participants with Modbus protocol (RTU) identical Modbus parameters but different address.

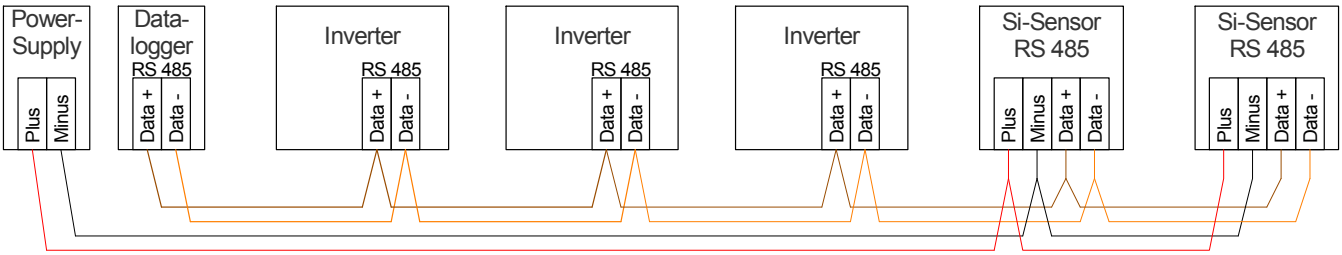

Dimension

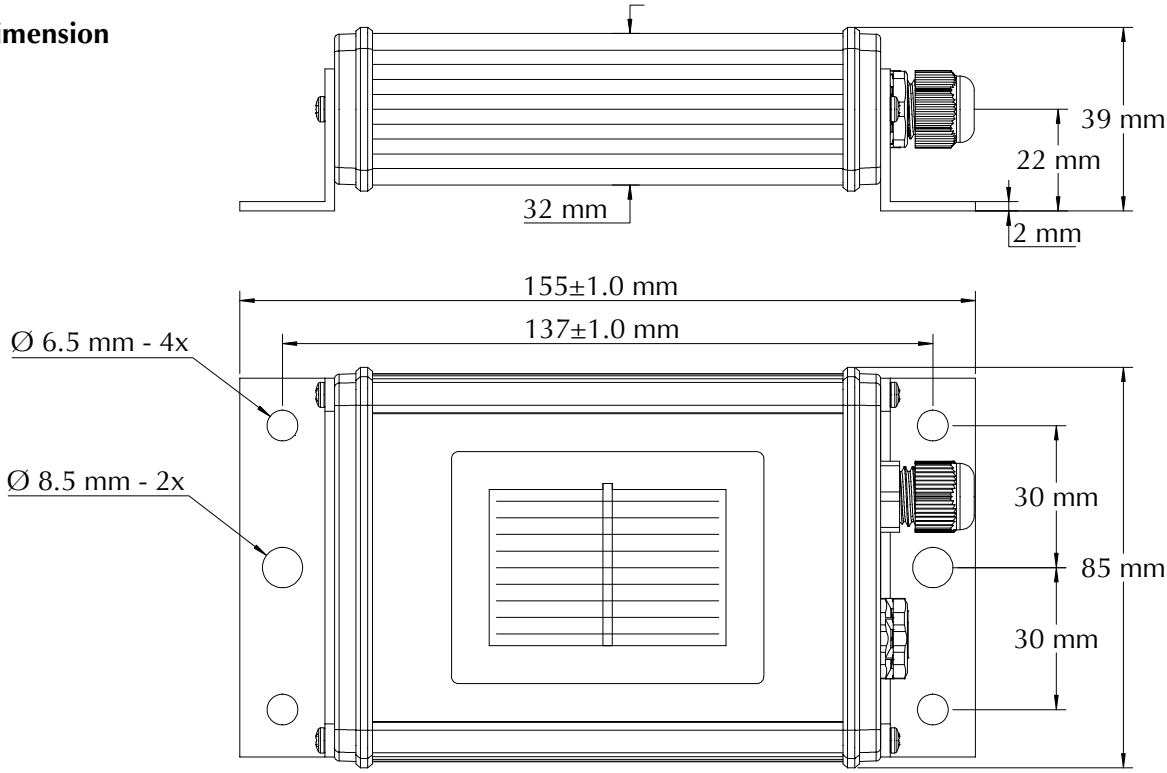

Mounting Instruction

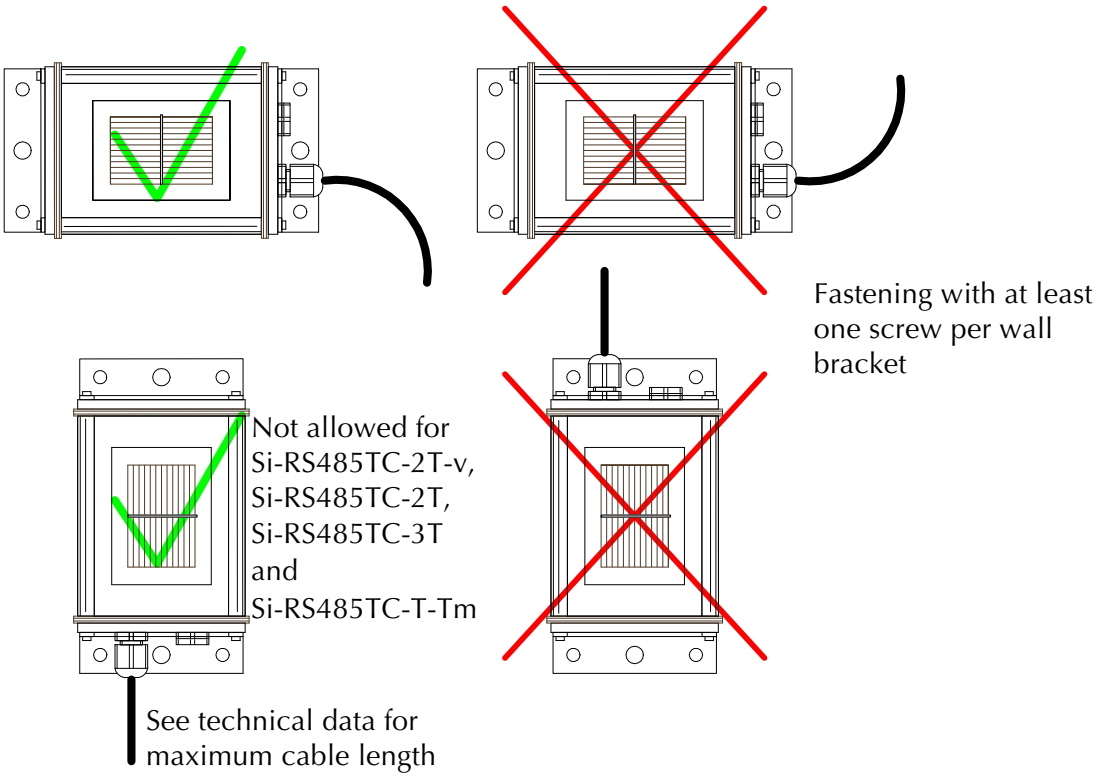

Technical Data

General Data	
Solar Cell	Monocrystalline Silicon; 50 mm x 33 mm
Housing Material Dimension / Weight Degree of Protection	Powder Coated Aluminium 155 mm x 85 mm x 39 mm / approx. 350 to 470 g IP 65
Operating Temperature	-35 to +80°C
Supply Voltage	24 VDC (10 ... 28 VDC)
Current Consumption	Typical 25 mA at 24 VDC
Sensor Cable	LiYC11Y 4x0.14mm²; length typical 3m
Maximum Cable Length	1000 m
Galvanic Isolation	Up to 1000 V between supply voltage and RS485
Customs Tariff Number / HS Code	90 15 80 20

Protocol	Settings (Default)	Note
Modbus (RTU)	Address: 1 Transmission rate: 9600 baud Format: 8N1	Address can be set (e.g. using software "Si Modbus Configurator") Max. transmission rate 38400 baud
MT	Address: last two digits of serial number Transmission rate: 9600 baud Format: 8N1	Cannot be changed

Note for configuration with software **"Si Modbus Configurator"**: Required are a computer, a voltage supply and an USB to RS485 interface converter.

